* ROHS COMPLIANT

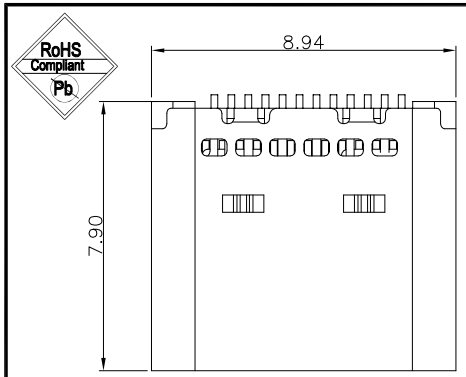


| NO. | DESCRIPTION | MATERIAL | REMARKS | QTY |
|---|---|---|---|---|
| 8 | 铁壳 | SUS 304-1/2H,T=0.30 | NI Plated | 1PCS |
| 7 | 弹片 | SUS 301-1/2H,T=0.10 | --- | 1PCS |
| 6 | 铁片 | SUS 301-3/4H,T=0.20 | --- | 1PCS |
| 5 | 铁片半成品 | LCP UL94V-0 | --- | 1PCS |
| 4 | 后端子 | C1814-H,T=0.12 | Sn/Au3u"/NI Plated | 1SET |
| 3 | 前端子 | C1814-H,T=0.12 | Sn/Au3u"/NI Plated | 1SET |
| 2 | 后插半成品 | LCP UL94V-0 | BLACK | 1PCS |
| 1 | 前插半成品 | LCP UL94V-0 | BLACK | 1PCS |

NOTES:

SPECIFICATION:

1. CURRENT RATING: 5A MAX
2. VOLTAGE: 100 VAC
3. TEMPERATURE RANGE: -30 °C ~ 85 °C
4. CONTACT RESISTANCE: 40 MILLIONHM MAX
5. INSULATION RESISTANCE: 100 MEGOHMS MIN.
6. LNSERTION FORCE : 5N~20N
7. UNMATING FORCE: 8N~20N
8. DURABILITY: 10,000 CYCLES
9. PACKAGE: TAPE REEL, 1000PCS/REEL

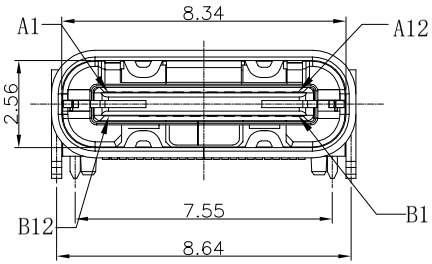


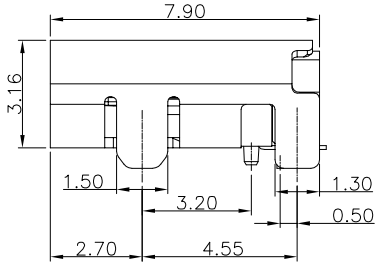


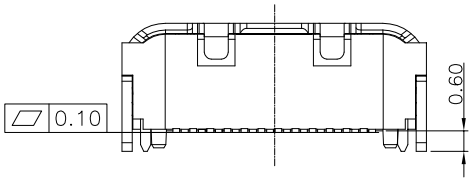


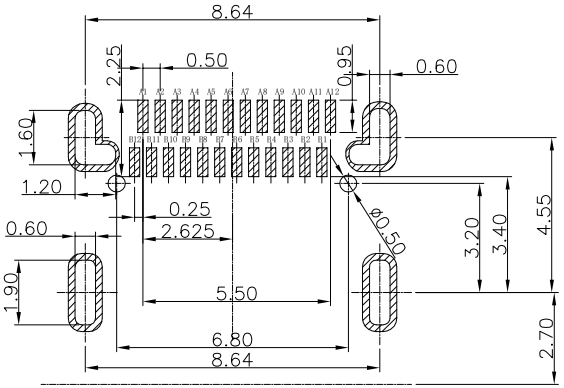


RECOMMENDED P.C.B. LAYOUT

TOLERANCE UNSPECIFIED ±0.05mm

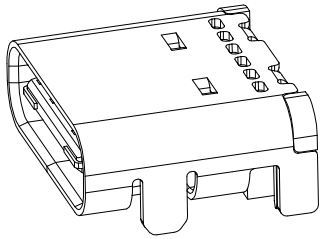

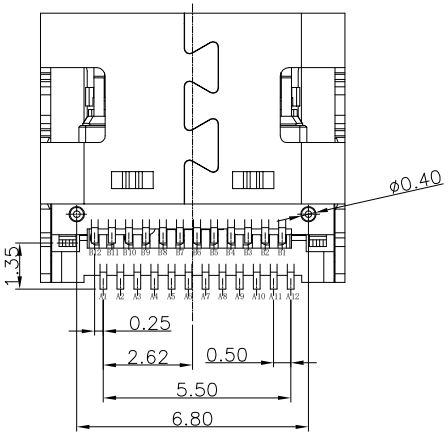


| PIN | SIGNAL NAME | PIN | SIGNAL NAME |
|---|---|---|---|
| A1 | GND | B12 | GND |
| A2 | SSTXP1 | B11 | SSRXP1 |
| A3 | SSTXN1 | B10 | SSRXN1 |
| A4 | VBUS | B9 | VBUS |
| A5 | CC1 | B8 | SBU2 |
| A6 | DP1 | B7 | DN2 |
| A7 | DN1 | B6 | DP2 |
| A8 | SBU1 | B5 | CC2 |
| A9 | VBUS | B4 | VBUS |
| A10 | SSRXN2 | B3 | SSTXN2 |
| A11 | SSRXP2 | B2 | SSTXP2 |
| A12 | GND | B1 | GND |

# SHINHWA TECH CO.,LTD

| | | | |
|---|---|---|---|
| DIMENSIONS INIT: mm<br>UNLESS OTHERWISE SPECIFIABLE<br>DIMENSION TOLERANCE<br>X.X: ± 0.38<br>X.XX: ± 0.25<br>X.XXX: ± 0.10<br>ANGULAR: ± 1° | PRODUCT NAME : USB C 24P FEMALE SMT | DRAWING: CHARLIE | DATE: 2014/01/15 |
| | PRODUCT NO. : SH-UTC-111578 | CHECK: AG | DATE: 2014/01/15 |
| | DRAWING NO. : | APPROVED: JEFF | DATE: 2014/01/15 |
| | | SCALE: NA / DWG ID: P D | REV.: A / PAGE: 1 OF 1 |

| REVISION NO. | ECR NO. | DESCRIPTION | MARK | DATE |
|---|---|---|---|---|
| | | | | |